K100 Pro Daylight Visible Beacon – AC

Datasheet

High Daylight Visibility, Multicolor Indicator with Optional Audible Alarm for Indoor or Outdoor Use

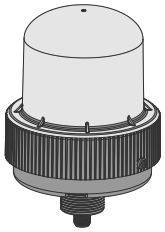

- Highly visible indicator provides bright, even light in direct sunlight
- Three colors in one device
- 36 mm threaded polycarbonate base
- Rugged IP66, UL Type 4X housing
- Variety of connector options
- Rugged UV-stabilized polycarbonate base and window
- 100 V AC to 240 V AC operating voltage

Models

Standard models shown. Contact factory for other options.

Family	Style	Type	Voltage	Color 1	Color 2	Color 3	Audible	Connector *
K100	P	BL	Z	G	Y	R	A	Q
	P = Pro	BL = Beacon	Z = AC	G = Green	Y = Yellow	R = Red	Blank = None A = Audible	Blank = 2 m integral PVC cable Q = 5-pin 1/2 in. 20 UNF male quick disconnect

* Models with a quick disconnect require a mating cordset

Wiring Diagrams

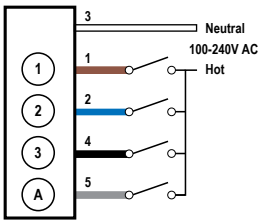

Key
1 = Brown
2 = Blue
3 = White
4 = Black
5 = Gray

An "X" denotes an active input.

For example: When Input 1 and Input 3 are both active, the indicator will be Color 1 Flashing at 1 Hz.

Table 1: Default Configuration

Wiring				Operating Mode/Function	
Brown (Input 1)	Blue (Input 2)	Black (Input 3)	Gray (Input 4)	Non-Audible	Audible
X				Color 1 Steady	Color 1 Steady
	X			Color 2 Steady	Color 2 Steady
		X		Color 3 Steady	Color 3 Steady
X		X		Color 1 Flashing at 1 Hz	Color 1 Flashing at 1 Hz
X	X			Color 2 Flashing at 1 Hz	Color 2 Flashing at 1 Hz
	X	X		Color 3 Flashing at 1 Hz	Color 3 Flashing at 1 Hz
X	X	X		Color 3, 3-pulse Strobe	Color 3, 3-pulse Strobe
			X	Off	Audible Steady, Frequency 2.5 KHz, Volume High
X			X	Color 1 Steady	Color 1 Steady, Audible Steady, Frequency 2.5 KHz, Volume High
	X		X	Color 2 Steady	Color 2 Steady, Audible Steady, Frequency 2.5 KHz, Volume High
		X	X	Color 3 Steady	Color 3 Steady, Audible Steady, Frequency 2.5 KHz, Volume High

Original Document
229903 Rev. B

29 September 2022

229903

Wiring				Operating Mode/Function	
Brown (Input 1)	Blue (Input 2)	Black (Input 3)	Gray (Input 4)	Non-Audible	Audible
X		X	X	Color 1 Flashing at 1 Hz	Color 1 Flashing at 1 Hz, Audible Steady, Frequency 2.5 KHz, Volume High
X	X		X	Color 2 Flashing at 1 Hz	Color 2 Flashing at 1 Hz, Audible Steady, Frequency 2.5 KHz, Volume High
	X	X	X	Color 3 Flashing at 1 Hz	Color 3 Flashing at 1 Hz, Audible Steady, Frequency 2.5 KHz, Volume High
X	X	X	X	Color 3, 3-pulse Strobe	Color 3, 3-pulse Strobe, Audible Steady, Frequency 2.5 KHz, Volume High

Specifications

Supply Voltage and Current
100 V AC to 240 V AC, 50 Hz to 60 Hz
Maximum current (mA AC at 60 Hz):

	Operating Mode/Function			
	Steady On, Flash, or Strobe [1]		Rotate	
Voltage	Light Only	Light & Audible	Light Only	Light & Audible
100	140	154	96	100
230	78	85	62	68

Supply Protection Circuitry
Protected against reverse polarity and transient voltages

Leakage Current Immunity
400 µA
The use of relay output PLC is recommended since there is no leakage current. Solid state output PLCs often have leakage current above 1 mA and, therefore, turn the light on in the off state. To counteract the leakage current, a shunt resistor must be used. A resistor must be applied from the neutral wire of the device to the hot wire of each channel of the device.

Indicator Response Time
On Response: 350 ms (maximum)
Off Response: 20 ms (maximum)

Connections
Integral 5-pin 1/2 in. 20UNF male quick-disconnect connector or 2 m (6.5 ft) integral PVC-jacketed cable, depending on model
Models with a quick disconnect require a mating cordset

Mounting
M36 by 2.0 threaded base, maximum torque 5.0 N·m (44 inch-lbf)
Interior 3/4-14 NPT Thread
Mounting nut included

Adjacent Unit Mounting Separation Distance
Minimum: 0 in (mounted with unit flanges touching)

Audible Characteristics
Sound Intensity at 2.5 KHz, at 1 m (typical):
Low volume setting: 93 dB
Medium volume setting: 96 dB
High volume setting: 101 dB

Construction
Base, Dome, and Nut: Polycarbonate

Operating Conditions
–40 °C to +60 °C (–40 °F to +140 °F)
90% at +50 °C maximum relative humidity (non-condensing)
Storage Temperature: –40 °C to +70 °C (–40 °F to +158 °F)

Vibration and Mechanical Shock
Meets IEC 60068-2-6 requirements (Vibration: 10 Hz to 55 Hz, 1.0 mm amplitude, 5 minutes sweep, 30 minutes dwell)
Meets IEC 60068-2-27 requirements (Shock: 30G 11 ms duration, half sine wave)
Impact: IK10 (60068-2-75)

Environmental Rating
IP66, UL Type 4X

LED Lifetime
Lumen maintenance L_{70}
When operating within specifications, output decreases less than 30% after 42,000 hours

Default Indicator Characteristics

Color	Dominant Wavelength (nm) or Color Temperature (CCT)	Color Coordinates [2]		Lumen Output (Typical at 25 °C)
		x	y	
Green	528 nm	0.1603	0.6973	360
Yellow	589 nm	0.5557	0.4276	525
Red	625 nm	0.6999	0.2982	155
Blue	475 nm	0.1167	0.1121	165
White	5500K ± 250	0.3320	0.3433	600

Internal temperature compensation circuitry: Reduces the Lumen Output to decrease the unit internal operating temperature. The amount of reduction is dependent on the ambient operating temperature, supply voltage, color, and/or audible functions being utilized.

Photometric Data

Multiply the values shown in the chart by the maximum candela values in the Max. Candela table:

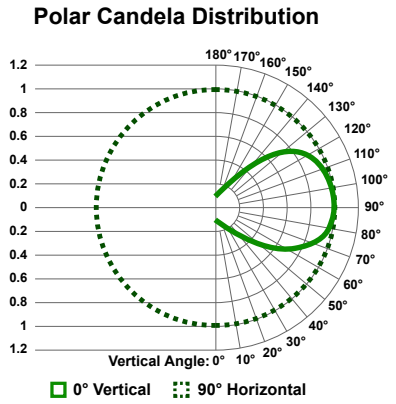

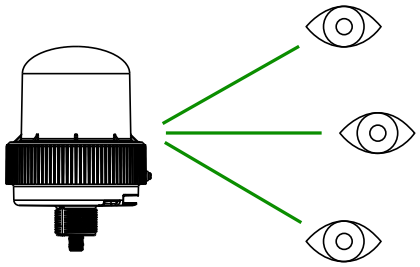

Table 2: Base Candela

Green	46
Yellow	67
Red	20
Blue	21
White	75

Table 3: Candela Viewing Angle Example – Red

Angle	Factor	Base [3]	Candela
120 (top view)	0.7	20	14
90 (side view)	1	20	20
60 (bottom view)	0.7	20	14

1 Flash or Strobe Mode: Peak current, operating at 50% duty cycle or less.
2 Refer to CIE 1931 chromaticity diagram or color chart, to show equivalent color with indicated color coordinates.
3 Red shown. See Base Candela table.

Dimensions

All measurements are listed in millimeters [inches], unless noted otherwise.

Figure 1. Standard Models

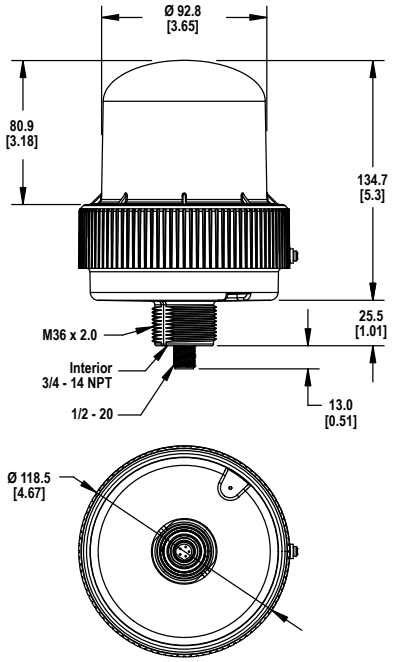

Figure 2. Audible Models

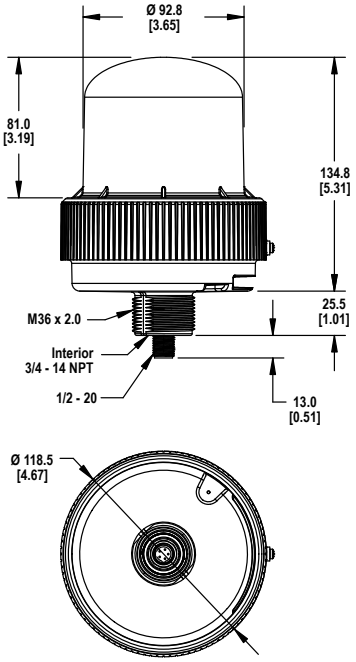

Accessories

Cordsets

All measurements are listed in millimeters, unless noted otherwise.

5-Pin 1/2-in Dual Key Cordsets—Single Ended				
Model	**Length**	**Style**	**Dimensions**	**Pinout**
MQAC2-506	2 m (6.56 ft)	Straight	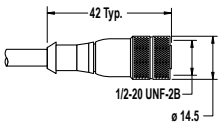	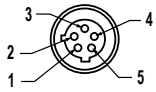 1 = Brown 2 = Blue 3 = White 4 = Black 5 = Gray
MQAC2-515	5 m (16.4 ft)			
MQAC2-530	9.14 m (30 ft)			

Brackets

LMB36RA

- Indicator light right-angle mounting
- 36 mm mounting hole
- Stainless steel

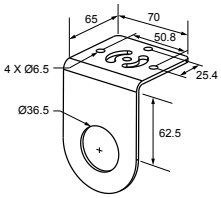

Elevated Mount System

Model			Features	Components
Black Anodized Aluminum ¾ in. NPT	**Black Anodized Aluminum ½ in. NPT**	**Clear Anodized Aluminum ½ in. NPT**		
SOP-E34-150A 150 mm (6 in) long	**SOP-E12-150A** 150 mm (6 in) long	**SOP-E12-150AC** 150 mm (6 in) long	• Elevated-use stand-off pipe • Black anodized aluminum or clear anodized aluminum surface • Threaded at both ends • Compatible with most industrial environments	
SOP-E34-300A 300 mm (12 in) long	**SOP-E12-300A** 300 mm (12 in) long	**SOP-E12-300AC** 300 mm (12 in) long		
SOP-E34-600A 600 mm (24 in) long	**SOP-E12-600A** 600 mm (24 in) long	–		
SOP-E34-900A 900 mm (36 in) long	**SOP-E12-900A** 900 mm (36 in) long	**SOP-E12-900AC** 900 mm (36 in) long		
SA-M36E12			• Adapter from M36 thread to 12-14 NPSM thread • Streamlined black plastic mounting base adapter/cover • Drilled hole	
SA-M36SOP			• M36 thread adapter with clearance for ¾ pipe mount • Streamlined black plastic mounting base adapter/cover • Drilled hole	

Pipe Mounting Flange			
Model	**Features**	**Construction**	
SA-F12	• Elevated-use stand-off pipes (½ in, NPSM/DN15) • M5 mounting hardware and nitrile gasket included	Die-cast zinc base with black paint	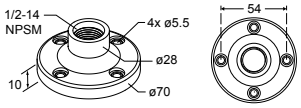

Banner Engineering Corp. Limited Warranty

Banner Engineering Corp. warrants its products to be free from defects in material and workmanship for one year following the date of shipment. Banner Engineering Corp. will repair or replace, free of charge, any product of its manufacture which, at the time it is returned to the factory, is found to have been defective during the warranty period. This warranty does not cover damage or liability for misuse, abuse, or the improper application or installation of the Banner product.

THIS LIMITED WARRANTY IS EXCLUSIVE AND IN LIEU OF ALL OTHER WARRANTIES WHETHER EXPRESS OR IMPLIED (INCLUDING, WITHOUT LIMITATION, ANY WARRANTY OF MERCHANTABILITY OR FITNESS FOR A PARTICULAR PURPOSE), AND WHETHER ARISING UNDER COURSE OF PERFORMANCE, COURSE OF DEALING OR TRADE USAGE.

This Warranty is exclusive and limited to repair or, at the discretion of Banner Engineering Corp., replacement. **IN NO EVENT SHALL BANNER ENGINEERING CORP. BE LIABLE TO BUYER OR ANY OTHER PERSON OR ENTITY FOR ANY EXTRA COSTS, EXPENSES, LOSSES, LOSS OF PROFITS, OR ANY INCIDENTAL, CONSEQUENTIAL OR SPECIAL DAMAGES RESULTING FROM ANY PRODUCT DEFECT OR FROM THE USE OR INABILITY TO USE THE PRODUCT, WHETHER ARISING IN CONTRACT OR WARRANTY, STATUTE, TORT, STRICT LIABILITY, NEGLIGENCE, OR OTHERWISE.**

Banner Engineering Corp. reserves the right to change, modify or improve the design of the product without assuming any obligations or liabilities relating to any product previously manufactured by Banner Engineering Corp. Any misuse, abuse, or improper application or installation of this product or use of the product for personal protection applications when the product is identified as not intended for such purposes will void the product warranty. Any modifications to this product without prior express approval by Banner Engineering Corp will void the product warranties. All specifications published in this document are subject to change; Banner reserves the right to modify product specifications or update documentation at any time. Specifications and product information in English supersede that which is provided in any other language. For the most recent version of any documentation, refer to: www.bannerengineering.com.

For patent information, see www.bannerengineering.com/patents.

more sensors, more solutions