MTS SENSORS

Temposonics®

Magnetostrictive Linear Position Sensors

ER IO-Link
Data Sheet

– Compact sensor model
– Operating temperature up to +75 °C (+167 °F)
– Ideal for flexible mounting

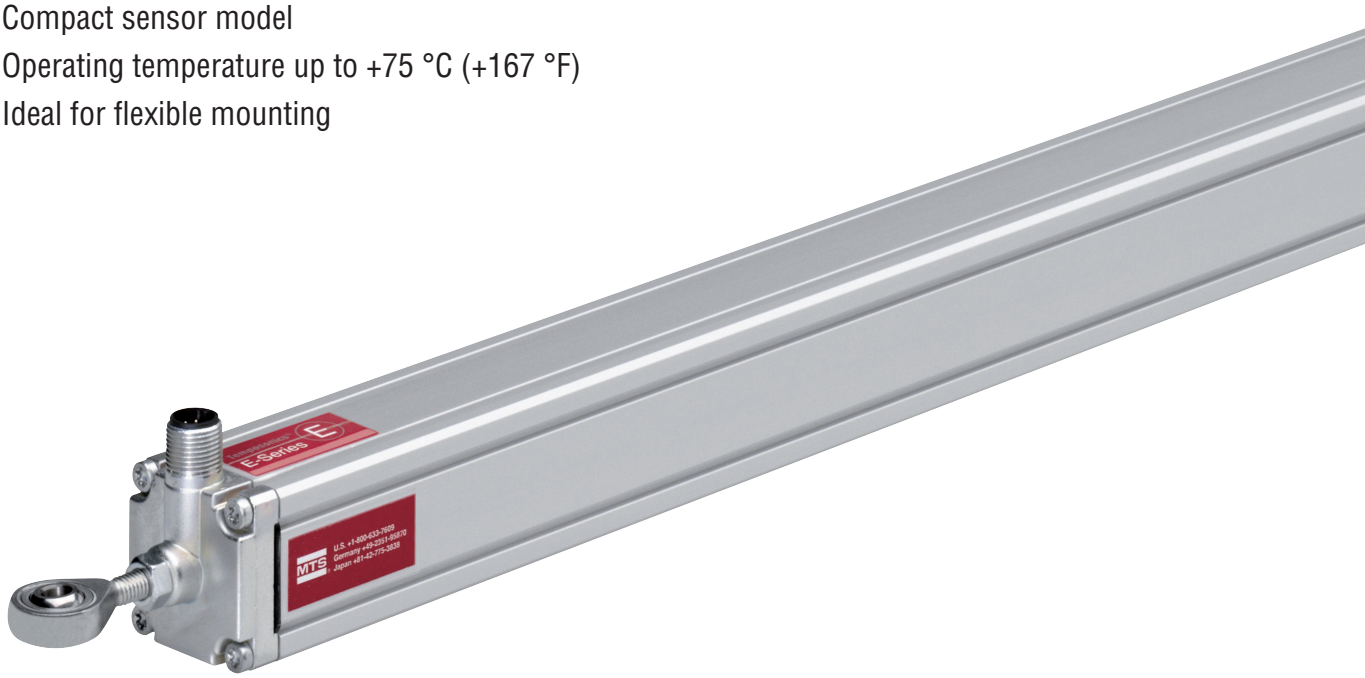

MEASURING TECHNOLOGY

The absolute, linear position sensors provided by MTS Sensors rely on the company's proprietary Temposonics® magnetostrictive technology, which can determine position with a high level of precision and robustness. Each Temposonics® position sensor consists of a ferromagnetic waveguide, a position magnet, a strain pulse converter and supporting electronics. The magnet, connected to the object in motion in the application, generates a magnetic field at its location on the waveguide. A short current pulse is applied to the waveguide. This creates a momentary radial magnetic field and torsional strain on the waveguide. The momentary interaction of the magnetic fields releases a torsional strain pulse that propagates the length of the waveguide. When the ultrasonic wave reaches the end of the waveguide it is converted into an electrical signal. Since the speed of the ultrasonic wave in the waveguide is precisely known, the time required to receive the return signal can be converted into a linear position measurement with both high accuracy and repeatability.

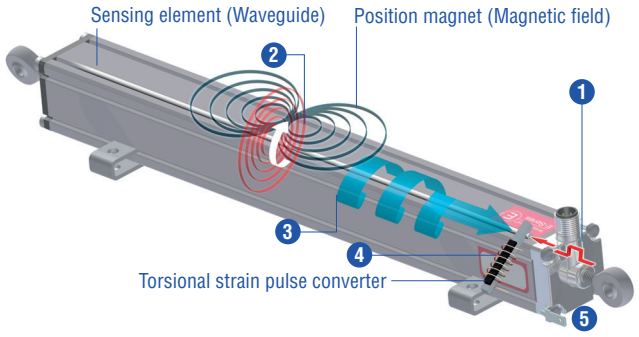

Measurement Cycle

1	Current pulse generates magnetic field
2	Interaction with position magnet field generates torsional strain pulse
3	Torsional strain pulse propagates
4	Strain pulse detected by converter
5	Time-of-flight converted into position

Fig. 1: Time-of-flight based magnetostrictive position sensing principle

ER SENSOR

Robust, non-contact and wear free, the Temposonics® linear position sensor provide high durability and precise position measurement feedback in harsh industrial environments. Measurement accuracy is tightly controlled by the quality of the waveguide manufactured exclusively by MTS Sensors.

Temposonics® ER has the shape of an aluminum cylinder with a guided driving rod and contains both the sensor element and the electronics. The position is detected via the solid extractable driving rod, which contains the position magnet and is mounted to the moveable machine part. The sensor can be installed in any orientation. Typical fields of application are printing and paper industry, machine tools and plastics industry as well as control systems. Temposonics® ER with IO-Link allows customers to adjust parameters including measuring direction, resolution or offset. In addition, a switching state can be outputted in parallel to the transfer of the position value. The switching points as well as the switching logic can be parameterized. IO-Link is an open standard according to IEC 61131-9. It is a serial, bi-directional point-to-point connection for signal transmission and energy supply. The bi-directional communication enables consistent communication between sensors and the controller as well as consistent diagnostic information down to the sensor level.

Fig. 2: Typical application: Paper industry

TECHNICAL DATA

Output	
Interface	Digital
Transmission protocol	IO-Link V1.1
Data format	32 bit signed (position in µm)
Data transmission rate	COM3 (230.4 kBaud)
Process data device – master	4 bytes
Process data master – device	0 bytes
Error value	0
Measured value	Position
Measurement parameters	
Resolution [1]	5 µm, 10 µm, 20 µm, 50 µm or 100 µm
Cycle time	minimum 1 ms (master dependent)
Linearity	≤ ±0.02 % F.S. (minimum ±60 µm)
Repeatability	≤ ±0.005 % F.S. (minimum ±20 µm)
Operating conditions	
Operating temperature	-40…+75 °C (-40…+167 °F)
Humidity	90 % rel. humidity, no condensation
Ingress protection [2]	IP67 (if mating cable connector is correctly fitted)
Shock test	100 g (single shock) IEC standard 60068-2-27
Vibration test	5 g / 10…2000 Hz IEC standard 60068-2-6 (resonance frequencies excluded)
EMC test	Electromagnetic emission according to EN 61000-6-3 Electromagnetic immunity according to EN 61000-6-2 The sensor meets the requirements of the EC directives and is marked with CE.
Magnet movement velocity	≤ 5 m/s
Design / Material	
Sensor housing	Aluminum
Guided driving rod	Aluminum
Stroke length	50…1500 mm (2…60 in.)
Mechanical mounting	
Mounting position	Any
Mounting instruction	Please consult the technical drawings and the brief instructions (document number: 551684)
Electrical connection	
Connection type	M12 (4 pin) male connector
Operating voltage	+24 VDC (±25 %)
Ripple	≤ 0.28 V_{pp}
Current consumption	< 50 mA
Dielectric strength	500 VDC (DC ground to machine ground)
Polarity protection	Up to -30 VDC
Overvoltage protection	Up to 36 VDC

1/ Selectable via IO-Link master
2/ The IP rating IP67 is only valid for the sensors electronics housing, as water and dust can get inside the profile.

TECHNICAL DRAWING

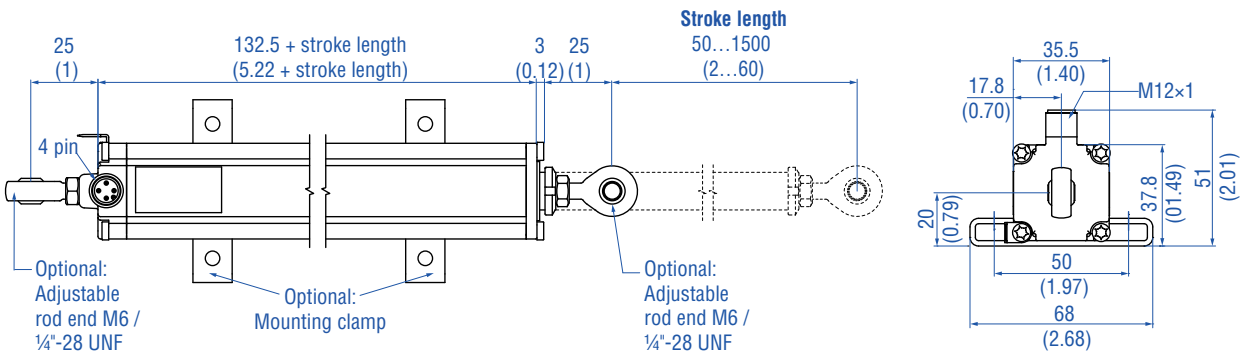

Controlling design dimensions are in millimeters and measurements in ( ) are in inches
Unless otherwise stated, apply to the general tolerances according to DIN ISO 2768-m

CONNECTOR WIRING

D44

M12 A-coded	Pin	Function
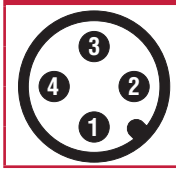	1	+24 VDC (±25 %)
	2	DI/DQ
	3	DC Ground (0 V)
	4	C/Q

FREQUENTLY ORDERED ACCESSORIES – Additional options available in our Accessories Guide 551444

Cord sets

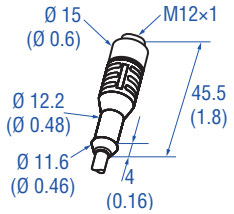

M12 (5 pin) female, straight
Part no. 370 673

Ingress protection: IP67
Cable: Shielded, pigtail end
Cable length: 5 m (16.4 ft.)

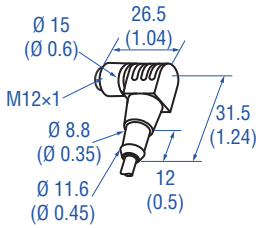

M12 (5 pin) female, angled
Part no. 370 675

Ingress protection: IP67
Cable: Shielded, pigtail end
Cable length: 5 m (16.4 ft.)

Mounting clamp

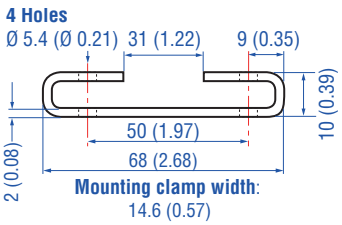

Mounting clamp
Part no. 403 508

Rod ends

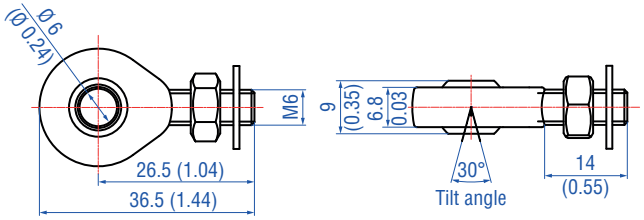

Rod end with M6 thread (for metric stroke length measurement)
Part no. 254 210

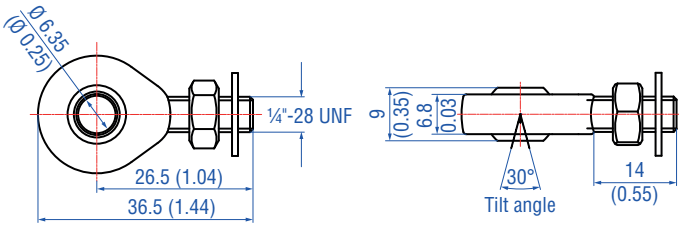

Rod end with ¼"-28 thread (for US customary stroke length measurement)
Part no. 254 235

Controlling design dimensions are in millimeters and measurements in ( ) are in inches

ORDER CODE

1	2	3	4	5	6	7	8	9	10	11	12	13
E	R							D	4	4	1	K
a		b	c					d			e	f

a	Sensor model
E R	Aluminum cylinder with a guided driving rod

b	Design
M	Inside thread M6 at end of rod (For metric stroke length measurement)
S	Inside thread ¼"-28 UNF at end of rod (For US customary stroke length measurement)

c	Stroke length
X X X X M	0050…1500 mm
X X X . X U	002.0…060.0 in.

Standard stroke length (mm)*

Stroke length	Ordering steps
50 … 500 mm	25 mm
500 … 1500 mm	50 mm

Standard stroke length (in.)*

Stroke length	Ordering steps
2 … 20 in.	1.0 in.
20 … 60 in.	2.0 in.

d	Connection type
D 4 4	M12 (4 pin) male connector

e	Operating voltage
1	+24 VDC (±25 %)

f	Output
K	IO-Link

DELIVERY

- Sensor

Accessories have to be ordered separately.

Select mounting accessories regarding your application:
- 1 or 2 rod ends M6 / ¼"-28 UNF or / and
- 2 mounting clamps up to 1250 mm (50 in.) stroke length, 3 mounting clamps for 1500 mm (60 in.) stroke length

Operation manuals & software are available at:
www.mtssensors.com

*/ Non standard stroke lengths are available; must be encoded in 5 mm / 0.1 in. increments

MTS SENSORS

Document Part number:
551832 Revision A (EN) 05/2016

Image reference
Fig. 2: © Alterfalter - Fotolia.com

LOCATIONS

USA
MTS Systems Corporation
Sensors Division
3001 Sheldon Drive
Cary, N.C. 27513, USA
Tel. +1 919 677-0100
Fax +1 919 677-0200
info.us@mtssensors.com
www.mtssensors.com

GERMANY
MTS Sensor Technologie
GmbH & Co. KG
Auf dem Schüffel 9
58513 Lüdenscheid, Germany
Tel. +49 2351 9587-0
Fax +49 2351 56491
info.de@mtssensors.com
www.mtssensors.com

JAPAN
MTS Sensors Technology Corp.
737 Aihara-machi,
Machida-shi,
Tokyo 194-0211, Japan
Tel. +81 42 775-3838
Fax +81 42 775-5512
info.jp@mtssensors.com
www.mtssensors.com

CHINA
MTS Sensors
Room 504, Huajing Commercial Center,
No. 188, North Qinzhou Road
200233 Shanghai, China
Tel. +86 21 6485 5800
Fax +86 21 6495 6329
info.cn@mtssensors.com
www.mtssensors.com

FRANCE
MTS Systems SAS
Zone EUROPARC Bâtiment EXA 16
16/18, rue Eugène Dupuis
94046 Creteil, France
Tel. +33 1 58 4390-28
Fax +33 1 58 4390-03
info.fr@mtssensors.com
www.mtssensors.com

ITALY
MTS Systems Srl
Sensor Division
Via Camillo Golgi, 5/7
25064 Gussago (BS), Italy
Tel. +39 030 988 3819
Fax +39 030 982 3359
info.it@mtssensors.com
www.mtssensors.com

LEGAL NOTICES